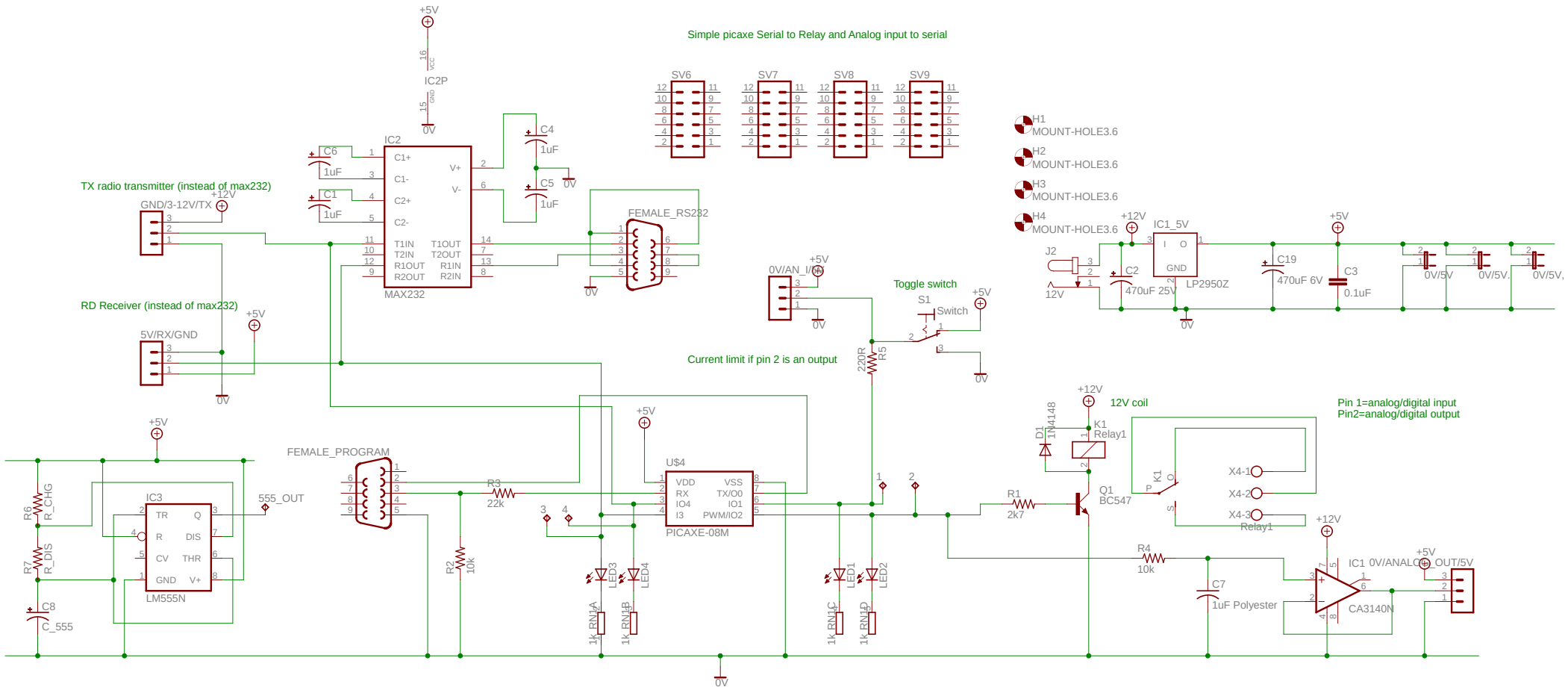

25/08/2009 3:24:47 PM f=0.76 C:\Program Files\EAGLE-5.0.0\projects\Picaxe 08M single relay\Picaxe_May_2009.sch (Sheet: 1/1)